Delay Analysis of Multihop Cognitive Radio Networks Using Network of Virtual Priority Queues

Dibakar Das Alhussein A. Abouzeid

Electrical, Computer and Systems Engineering
Rensselaer Polytechnic Institute
Troy, NY 12180
Emails: dasd2@rpi.edu, abouza@rpi.edu

April 7, 2014

Introduction

- A wireless ad-hoc network: multi-hop wireless, nodes use random-access MAC.

Introduction

- A wireless ad-hoc network: multi-hop wireless, nodes use random-access MAC.
- Consider two co-existing networks with $n^{(p)} + 1$ and $n^{(s)} + 1$ primary and secondary nodes respectively.

Introduction

- A wireless ad-hoc network: multi-hop wireless, nodes use random-access MAC.
- Consider two co-existing networks with $n^{(p)} + 1$ and $n^{(s)} + 1$ primary and secondary nodes respectively.
- Nodes use random access MAC with exponentially distributed back-off timers.

Introduction

- A wireless ad-hoc network: multi-hop wireless, nodes use random-access MAC.
- Consider two co-existing networks with $n^{(p)} + 1$ and $n^{(s)} + 1$ primary and secondary nodes respectively.
- Nodes use random access MAC with exponentially distributed back-off timers.
- Probabilistic routing scheme.

Introduction

- A wireless ad-hoc network: multi-hop wireless, nodes use random-access MAC.
- Consider two co-existing networks with $n^{(p)} + 1$ and $n^{(s)} + 1$ primary and secondary nodes respectively.
- Nodes use random access MAC with exponentially distributed back-off timers.
- Probabilistic routing scheme.
- Main results: obtained closed-form expressions for the average end-to-end queuing delay averaged over all network topologies and number of transmitted packets, and maximum achievable throughput of secondary nodes, as a function of primary network.

Related Work

- [Wang,Zhang, Infocom, 2010]: Delay analysis for single-hop network.
- [Chen, Liu, IEEE Trans. on Wireless Communications, 2011]: Delay performance of one secondary user in presence of other primary users.
- [Ren, Zhao, IEEE Journal on Selected Areas in Communications, 2011]: Characterize the minimum multi-hop delay and connectivity of the secondary network.
- [Tran, Duong, ISWPC, 2010], [Zhang, Li, ICC, 2009], [Do, Tran, ICOIN, 2012]: Use priority queues to model the behavior of secondary node.

Prior work: Single-user, no contention, service time independent of other nodes.

Network and Interference Model

- Network consists of $n^{(p)} + 1$ primary and $n^{(s)} + 1$ secondary nodes that are distributed uniformly and independently over a unit torus.

Network and Interference Model

- Network consists of $n^{(p)} + 1$ primary and $n^{(s)} + 1$ secondary nodes that are distributed uniformly and independently over a unit torus.
- $r^{(p)}$ and $r^{(s)}$ denote the transmission radius of primary and secondary nodes respectively. Primary (or secondary) nodes are located within transmission radius of a primary (or secondary) node are its neighbors.

Network and Interference Model

- Network consists of $n^{(p)} + 1$ primary and $n^{(s)} + 1$ secondary nodes that are distributed uniformly and independently over a unit torus.
- $r^{(p)}$ and $r^{(s)}$ denote the transmission radius of primary and secondary nodes respectively. Primary (or secondary) nodes are located within transmission radius of a primary (or secondary) node are its neighbors.
- Node i can successfully transmit a packet to node j only if j is outside the transmission radius of any other node k that is simultaneously transmitting.

Network and Interference Model(contd.)

- Interfering neighbors to a secondary node: all primary nodes located within distance of $r^{(p)} + r^{(s)}$, and all secondary nodes located within $2r^{(s)}$ from it.

Network and Interference Model(contd.)

- Interfering neighbors to a secondary node: all primary nodes located within distance of $r^{(p)} + r^{(s)}$, and all secondary nodes located within $2r^{(s)}$ from it.
- Interfering neighbors to a primary node: all primary nodes located within distance of $2r^{(p)}$ from it.

Interference model

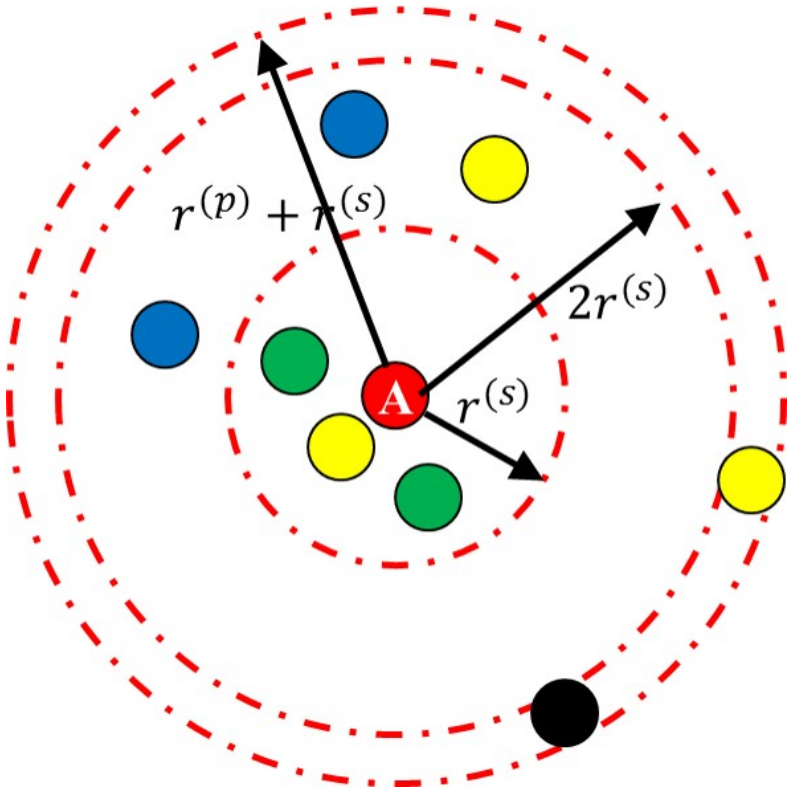

- : Neighbors of A.
- + : Secondary interfering neighbors of A
- : Primary interfering neighbors of A
- : Secondary non-interfering neighbors of A

MAC Model

- Each node counts down an exponentially distributed random timer prior to a packet transmission. We denote the mean duration of the timer corresponding to each primary and secondary node as $\frac{1}{\xi^{(p)}}$ and $\frac{1}{\xi^{(s)}}$ respectively.

MAC Model

- Each node counts down an exponentially distributed random timer prior to a packet transmission. We denote the mean duration of the timer corresponding to each primary and secondary node as $\frac{1}{\xi^{(p)}}$ and $\frac{1}{\xi^{(s)}}$ respectively.
- A primary (or secondary) node freezes its timer once it detects transmission from another primary (or secondary) interfering neighbor.

MAC Model

- Each node counts down an exponentially distributed random timer prior to a packet transmission. We denote the mean duration of the timer corresponding to each primary and secondary node as $\frac{1}{\xi^{(p)}}$ and $\frac{1}{\xi^{(s)}}$ respectively.
- A primary (or secondary) node freezes its timer once it detects transmission from another primary (or secondary) interfering neighbor.
- A secondary node also freezes its timer and any ongoing transmission once it detects transmission from another primary interfering neighbor.

MAC Model

- Each node counts down an exponentially distributed random timer prior to a packet transmission. We denote the mean duration of the timer corresponding to each primary and secondary node as $\frac{1}{\xi^{(p)}}$ and $\frac{1}{\xi^{(s)}}$ respectively.
- A primary (or secondary) node freezes its timer once it detects transmission from another primary (or secondary) interfering neighbor.
- A secondary node also freezes its timer and any ongoing transmission once it detects transmission from another primary interfering neighbor.

This models the backoff scheme of IEEE 802.11 while ensuring mathematical tractability.

Packet Generation and Routing Model

- Primary (or secondary) packet generation process is Poisson with rate $\lambda^{(p)}$ (or $\lambda^{(s)}$) packets per second .
- Each packet is of constant length L.

Packet Generation and Routing Model

- Primary (or secondary) packet generation process is Poisson with rate $\lambda^{(p)}$ (or $\lambda^{(s)}$) packets per second .
- Each packet is of constant length L.
- Probabilistic Routing: on reception of packet, a primary (or secondary) node absorbs it with probability $q^{(p)}$ (or $q^{(s)}$) or forward it to any neighbor, picked randomly, with probability $1 - q^{(p)}$ (or $1 - q^{(s)}$)

Queuing Network Representation

- Model the secondary network as two-class priority queuing network.
- Each station represents a secondary node.
- The first class (highest priority) of job arrivals at any station consists of packet transmissions from interfering neighbors -primary and secondary.
- The second class (low priority) of job arrivals consists of packets forwarded from neighboring secondary nodes and ones generated at that node.

Queuing Network Representation (contd.)

- Class 1 jobs are served at rate $\frac{L}{W}$ where W is the channel bandwidth.
- Class 2 jobs from any station are forwarded with probability $\frac{1-q^{(s)}}{\text{number of neighbors}}$ as class 2 jobs to its neighbors and with probability 1 as class 1 jobs to interfering secondary neighbors.

Priority Queuing Network Representation of The Secondary Network

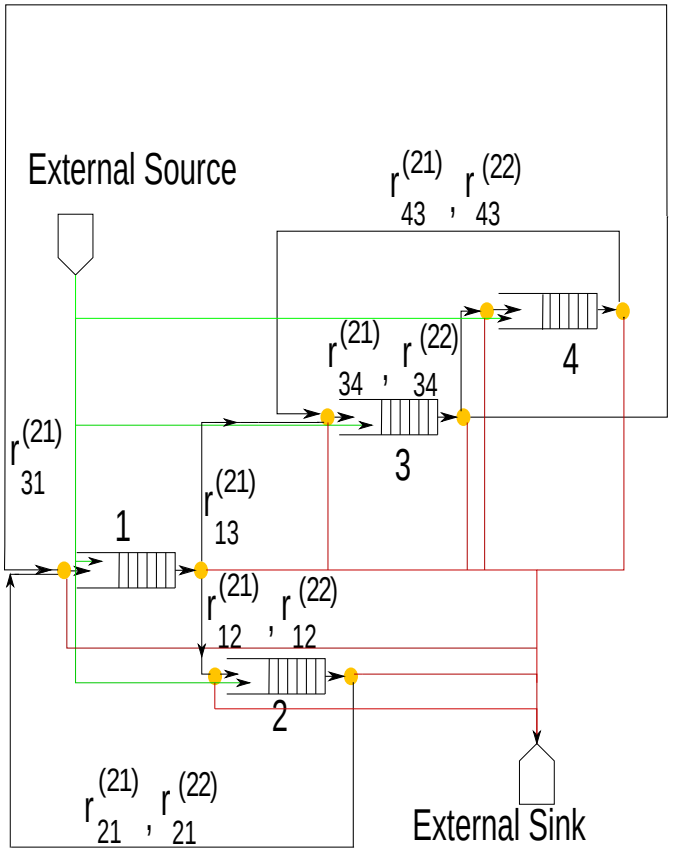

$r_{ij}^{(k,l)}$: routing probability of class-k job from station i as a class-l job to station j

Priority Queuing Network Representation of The Secondary Network(contd.)

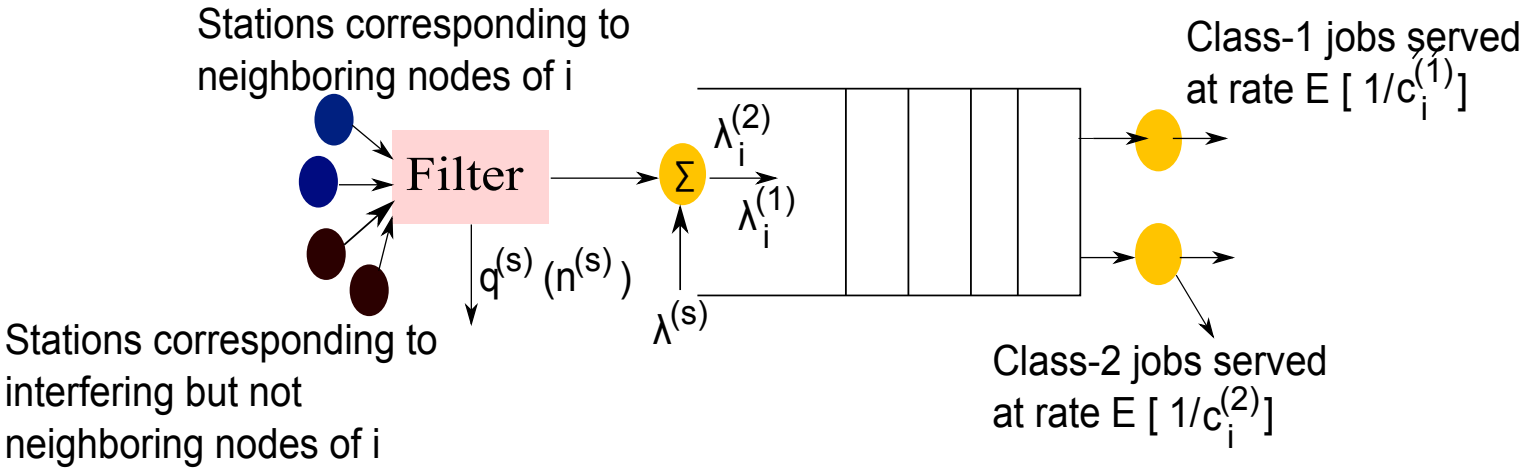

Representation of The Secondary Network As A Network of $G/G/1$ Queues

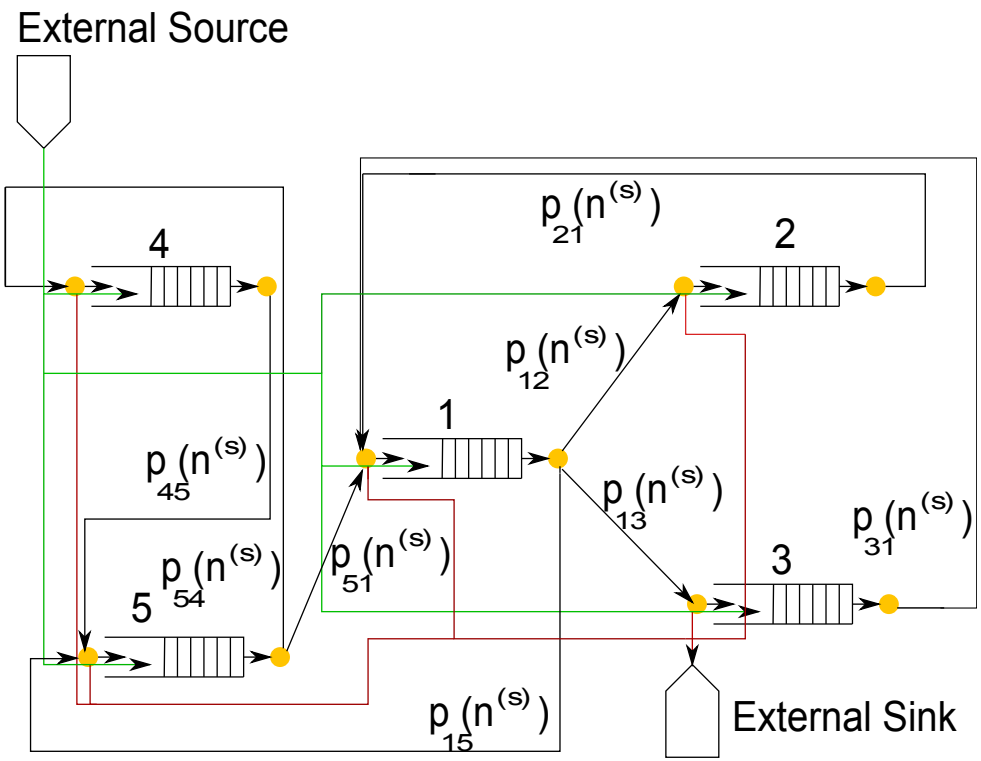

p_{ij}: routing probability from station i to neighbor j

Representation of The Secondary Network As A Network of $G/G/1$ Queues(contd.)

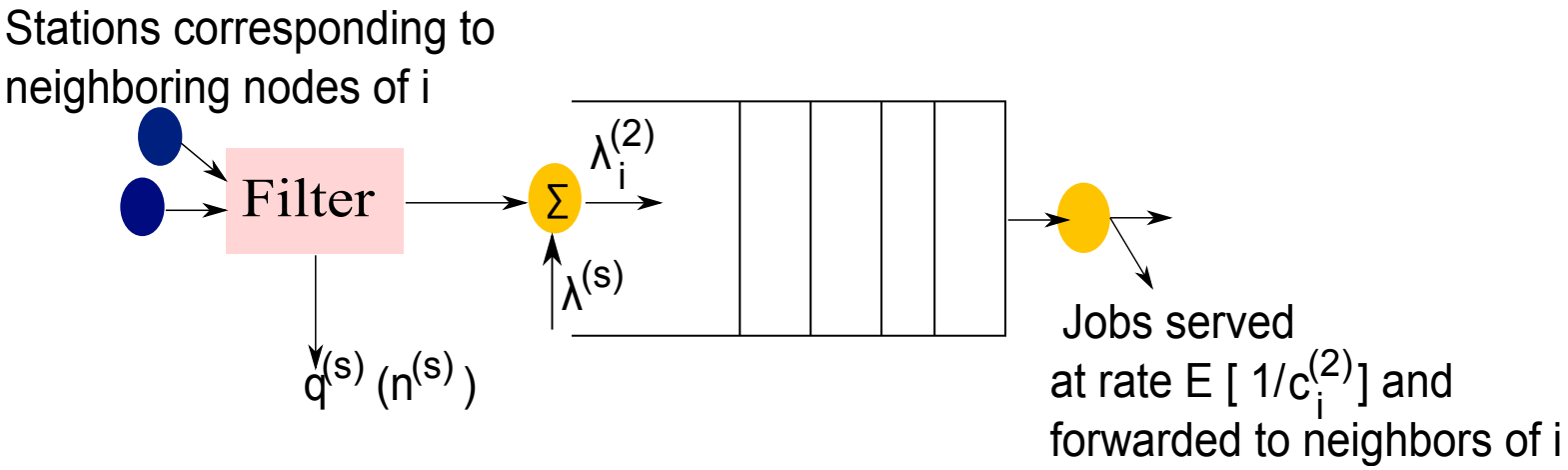

Note About The Network Model

- The network model is based on [Bisnik, Abouzeid, Ad Hoc Networks, 2009] extended here to the case of primary-secondary network.
- The previous work finds average end-to-end delay in an ad-hoc network using diffusion approximation for a network of $G/G/1$ queues.
- This work considers two co-existing and interacting networks where nodes from one network (i.e. primary) have higher priority in accessing the channel than the nodes from the second network (i.e. secondary).
- This coupling of the behavior of the queues in the two networks introduced new modeling challenges, which are analyzed by applying new approximation techniques that has not been used before in this context.

Diffusion Approximation for Priority Queues

- An approximation for completion and inter-departure time of jobs of any class at a station consisting of priority queues is provided in [Czachrski, Nycz, Pekergin, International Journal On Advances in Networks and Services, 2009].
- Approximate pdf of completion time of a class-k job is given as

$$f_{c^{(k)}}(t) = \int_0^\infty f_{b^{(k)}}(t)\psi^{(k)}(t - T|T)1(t - T)\mathrm{d}T$$

where $1(t)$ is the unit step function and T denotes the service-time of a class-k job without interruptions.

Diffusion Approximation for Priority Queues

- An approximation for completion and inter-departure time of jobs of any class at a station consisting of priority queues is provided in [Czachrski, Nycz, Pekergin, International Journal On Advances in Networks and Services, 2009].
- Approximate pdf of completion time of a class-k job is given as

$$f_{c^{(k)}}(t) = \int_0^\infty f_{b^{(k)}}(t)\psi^{(k)}(t-T|T)1(t-T)\mathrm{d}T$$

  where $1(t)$ is the unit step function and T denotes the service-time of a class-k job without interruptions.
- Approximate pdf of inter-departure time of a class-k job is given as

$$f_{d^{(k)}}(t) = \frac{\rho^{(k)}}{1-R^{(k-1)}} f_{c^{(k)}}(t) + (1 - \frac{\rho^{(k)}}{1-R^{(k-1)}}) \\ [(1-R^{(k-1)}) f_{a^{(k)}}(t) * f_{c^{(k)}}(t) + \\ R^{(k-1)} f_{a^{(k)}}(t) * \gamma^{(k-1)}(t) * f_{c^{(k)}}(t)]$$

Diffusion Approximation for Priority Queues – details

f_b: pdf of service time of a class-k job in absence of interruptions.
$\psi^{(k)}$: pdf of duration of all interruptions during the service of a class-k job.
ρ^k: Utilization of queue corresponding to class-k jobs if there were no arrival of jobs of higher classes.
$R^{(k-1)} = \rho^{(1)} + ... + \rho^{(k-1)}$

Diffusion Approximation for Network of G/G/ 1 Queues

- Let ρ_i denote utilization of node i. Then the average number of jobs at node i is given as

$$\bar{K}_i = \frac{\rho_i}{1 - \hat{\rho}_i}$$

where $\hat{\rho}_i = exp(-\frac{2(1-\rho_i)}{C_{Ai}^2 \cdot \rho_i + C_{Bi}^2})$; C_{Ai} and C_{Bi} denote the co-efficient of variation of arrival-time and service-time of jobs at i respectively.

We use the above equation to find average number of packets at a station. The coefficient of variation parameters themselves are obtained using the approximation techniques mentioned in the previous slide.

Calculating Average End-to-end Delay

Following results can be obtained immediately from [Bisnik, Abouzeid, Ad Hoc Networks, 2009]:

- Exact expressions for mean and second moment of effective service-time of primary nodes in terms of primary network parameters.
- For any secondary node i , mean number of primary interfering neighbors to i, $\bar{N}_i^{(p)} = (n^{(p)} + 1)A_{r^{(p)},r^{(s)}}$, where $A_{r^{(p)},r^{(s)}} = \pi(r^{(p)} + r^{(s)})^2$. Mean number of secondary interfering neighbors to i, $\bar{N}_i^{(s)} = 4n^{(s)}A_{r^{(s)}}$ where $A_{r^{(s)}} = \pi(r^{(s)})^2$.
- The probability of routing a class-2 job as class-2 job from secondary node i to secondary node v is, $r_{iv}^{(2,2)} = \frac{1-q^{(s)}}{n^{(s)}}$.
- Average number of hops traversed by a secondary packet before being absorbed is $\frac{1}{q^{(s)}}$.

Calculating Average End-to-end Delay (contd.)

- Obtain the mean and second moment of service-time (without interruption) of class-1 and class-2 jobs.

Calculating Average End-to-end Delay (contd.)

- Obtain the mean and second moment of service-time (without interruption) of class-1 and class-2 jobs.
- Use approximation techniques to find mean and second moment of inter-departure time and completion time of class-2 jobs at any secondary station.

Calculating Average End-to-end Delay (contd.)

- Obtain the mean and second moment of service-time (without interruption) of class-1 and class-2 jobs.
- Use approximation techniques to find mean and second moment of inter-departure time and completion time of class-2 jobs at any secondary station.
- Derive the co-efficient of variation of inter-departure times of class-1 and class-2 jobs and inter-arrival time of class-1 jobs and express those variables in terms of known network parameters.

Calculating Average End-to-end Delay (contd.)

- Obtain the mean and second moment of service-time (without interruption) of class-1 and class-2 jobs.
- Use approximation techniques to find mean and second moment of inter-departure time and completion time of class-2 jobs at any secondary station.
- Derive the co-efficient of variation of inter-departure times of class-1 and class-2 jobs and inter-arrival time of class-1 jobs and express those variables in terms of known network parameters.
- Use diffusion-approximation for a network of $G/G/1$ queues to find average number of jobs at any station.

Calculating Average End-to-end Delay (contd.)

- Obtain the mean and second moment of service-time (without interruption) of class-1 and class-2 jobs.
- Use approximation techniques to find mean and second moment of inter-departure time and completion time of class-2 jobs at any secondary station.
- Derive the co-efficient of variation of inter-departure times of class-1 and class-2 jobs and inter-arrival time of class-1 jobs and express those variables in terms of known network parameters.
- Use diffusion-approximation for a network of $G/G/1$ queues to find average number of jobs at any station.
- Use Littles Theorem to obtain average system delay at any secondary station.

Calculating Average End-to-end Delay (contd.)

- Obtain the mean and second moment of service-time (without interruption) of class-1 and class-2 jobs.
- Use approximation techniques to find mean and second moment of inter-departure time and completion time of class-2 jobs at any secondary station.
- Derive the co-efficient of variation of inter-departure times of class-1 and class-2 jobs and inter-arrival time of class-1 jobs and express those variables in terms of known network parameters.
- Use diffusion-approximation for a network of $G/G/1$ queues to find average number of jobs at any station.
- Use Littles Theorem to obtain average system delay at any secondary station.
- Multiply the above by average number of hops to find average end-to-end delay.

Maximum Achievable Throughput

- Use $q^{(s)} = r^{(s)} = \sqrt{\frac{log(n^{(s)})}{n^{(s)}}}$ and $q^{(p)} = r^{(p)} = \sqrt{\frac{log(n^{(p)})}{n^{(p)}}}$ to make the transmission radius and average number of hops traversed by a packet comparable to the corresponding parameters in the Gupta-Kumar model.

Maximum Achievable Throughput

- Use $q^{(s)} = r^{(s)} = \sqrt{\frac{log(n^{(s)})}{n^{(s)}}}$ and $q^{(p)} = r^{(p)} = \sqrt{\frac{log(n^{(p)})}{n^{(p)}}}$ to make the transmission radius and average number of hops traversed by a packet comparable to the corresponding parameters in the Gupta-Kumar model.
- The maximum achievable throughput of any secondary node is given as,

$$\lambda_{max}^{(s)} = \frac{q^{(s)}\{1 - (\frac{n^{(p)} A_{r^{(p)}, r^{(s)}} \lambda^{(p)}}{q^{(p)}})\frac{L}{W}\}}{\frac{1}{\xi^{(s)}} + \frac{L}{W} + 4n^{(s)} A_{r^{(s)}} \frac{L}{W}}$$

Maximum Achievable Throughput

- Use $q^{(s)} = r^{(s)} = \sqrt{\frac{log(n^{(s)})}{n^{(s)}}}$ and $q^{(p)} = r^{(p)} = \sqrt{\frac{log(n^{(p)})}{n^{(p)}}}$ to make the transmission radius and average number of hops traversed by a packet comparable to the corresponding parameters in the Gupta-Kumar model.
- The maximum achievable throughput of any secondary node is given as,

$$\lambda_{max}^{(s)} = \frac{q^{(s)}\{1 - (\frac{n^{(p)} A_{r^{(p)},r^{(s)}} \lambda^{(p)}}{q^{(p)}})\frac{L}{W}\}}{\frac{1}{\xi^{(s)}} + \frac{L}{W} + 4n^{(s)} A_{r^{(s)}} \frac{L}{W}}$$

- Then $\lambda_{max}^{(s)} = o(\frac{W}{\sqrt{n^{(s)} log(n^{(s)})}})$. In addition with fixed number of primary nodes, $\lambda_{max}^{(s)}$ is asymptotically greater than a constant fraction of maximum achievable throughput for the corresponding stand-alone network (i.e. secondary network in absence of primary nodes) and the constant term consists only of parameters from the primary network.

Results Validation

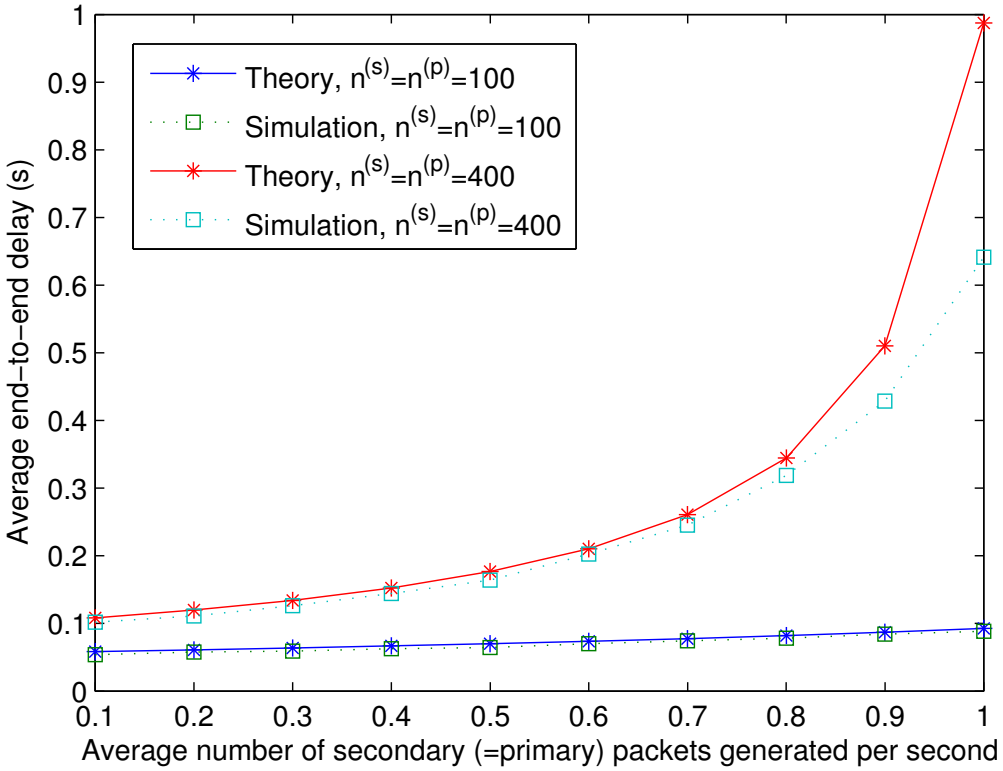

Figure: Simulation with varying packet generation rates

Results Validation(contd.)

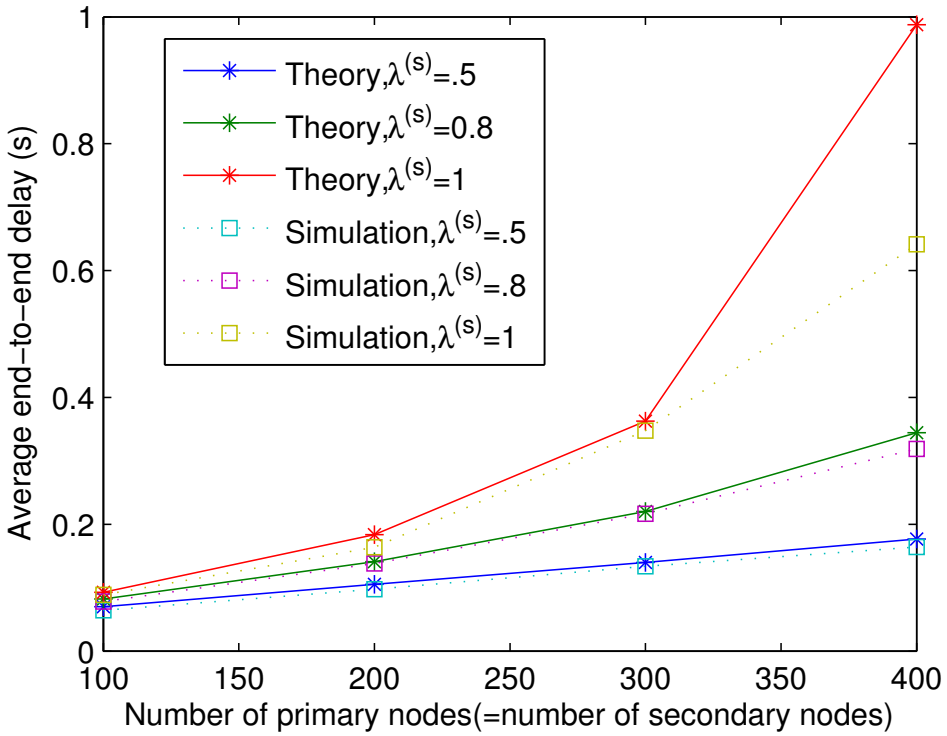

Figure: Simulation with varying number of nodes.

Results Validation(contd.)

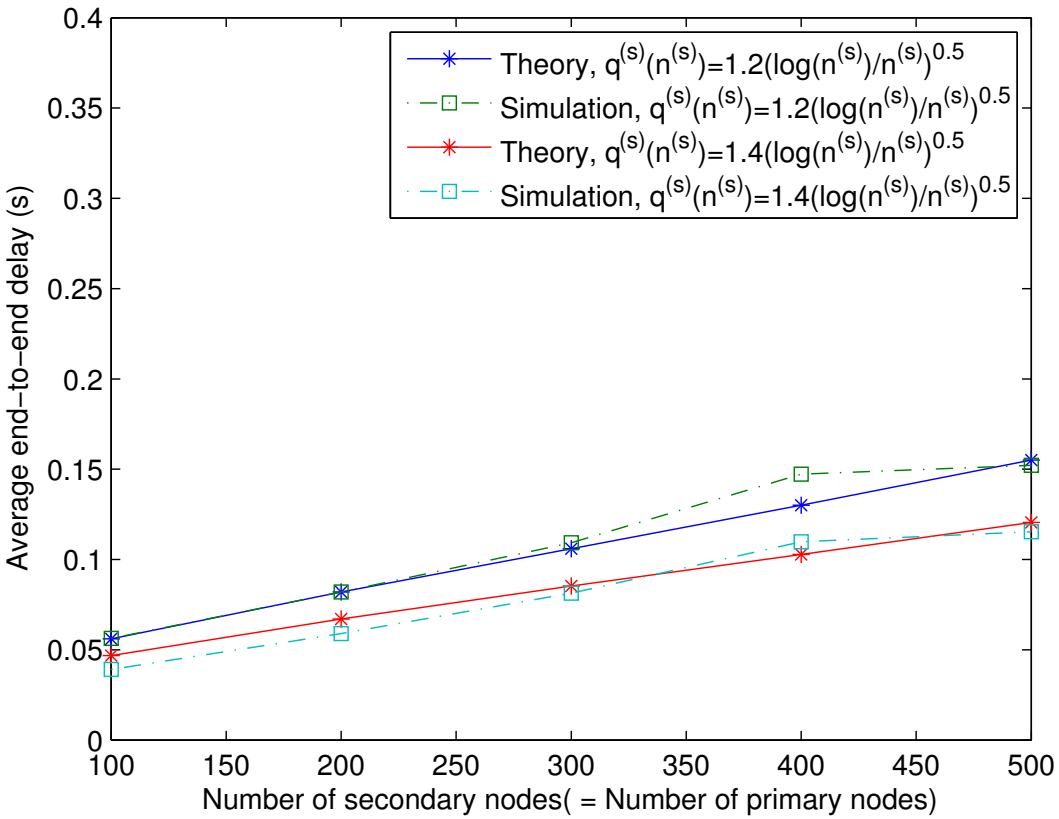

Figure: Simulations using shortest path routing.

Conclusion & Future Work

- Obtained closed-form expressions for the average end-to-end queuing delay averaged over all network topologies and number of transmitted packets, and maximum achievable throughput of secondary nodes, as a function of primary network.
- Extend the analysis to various other modes of co-existence e.g. cooperation and competition e.g. Secondary users carry and forward Primary traffic.
- Analysis for specific topologies or non-probabilistic routing e.g. a routing matrix.

Bibliography

- S. Wang, J. Zhang, and L. Tong, Delay analysis for cognitive radio networks with random access: A fluid queue view, in INFOCOM, 2010Proceedings IEEE, 2010, pp. 19.
- R.R. Chen and X. Liu, Delay performance of threshold policies for dynamic spectrum access, IEEE Transactions on Wireless Communications, vol. 10, no. 7, pp. 22832293, 2011.
- W. Ren, Q. Zhao, and A. Swami, On the connectivity and multihopdelay of ad hoc cognitive radio networks, CoRR, vol. abs/0912.4087, 2009.
- H. Tran, T. Q. Duong, and H.-J. Zepernick, Average waiting time of packets with different priorities in cognitive radio networks, in Wireless Pervasive Computing (ISWPC), 2010 5th IEEE International Symposium on, may 2010, pp. 122 127.
- C. Zhang, X. Wang, and J. Li, Cooperative cognitive radio with priority queuing analysis, in Communications, 2009. ICC 09. IEEE International Conference on, June, pp. 15.

Bibliography(contd.)

- C. Do, N. Tran, and C. seonHong, Throughput maximization for the secondary user over multi-channel cognitive radio networks, in Information Networking (ICOIN), 2012 International Conference on, Feb., pp. 6569.
- N. Bisnikand A. A. Abouzeid, Queuing network models for delay analysis of multihopwireless ad hoc networks, Ad Hoc Networks, vol. 7, no. 1, pp. 79 97, 2009.
- T. Czachrski, T. Nycz, and F. Pekergin, Diffusion approximation models for transient states and their application to priority queues, International Journal On Advances in Networks and Services, vol. 2, no. 2, pp. 205217, Dec. 2009.
- G. Bolch, S. Greiner, H. d. Meer, and K. S. Trivedi, QueueingNetworkand Markov Chains. Wiley-Interscience, 2005

THANKS!

- http://www.rpi.edu/~abouza
- abouza@rpi.edu